EUROLINE STEEL WINDOWS & DOORS

SERIES 900 THERMAL STEEL FIXED WINDOW (HVHZ) (IMPACT)

GENERAL NOTES:

1. THE PRODUCT SHOWN HEREIN IS DESIGNED AND MANUFACTURED TO COMPLY WITH THE CURRENT EDITION FLORIDA BUILDING CODE (FBC) **INCLUDING** HVHZ. ALL PRODUCTS UNDER THE SCOPE OF THIS DOCUMENT HAVE BEEN EVALUATED ACCORDING TO THE FOLLOWING:
   - AAMA/WDMA/CSA 101/I.S.2/A440-22
   - ASTM E283/E283M-19
   - ASTM E330/E330M-14(21)
   - ASTM E331-00(23)
   - ASTM E1886-19
   - ASTM E1996-23
   - TAS 201-94
   - TAS 202-94
   - TAS 203-94

2. ADEQUACY OF THE EXISTING STRUCTURAL CONCRETE/MASONRY, 2X STUD FRAMING AS A MAIN WIND FORCE RESISTING SYSTEM CAPABLE OF WITHSTANDING AND TRANSFERRING APPLIED PRODUCT LOADS TO THE FOUNDATION IS THE RESPONSIBILITY OF THE ENGINEER OR ARCHITECT OF RECORD FOR THE PROJECT OF INSTALLATION.

3. 1X AND 2X BUCKS (WHEN USED) SHALL BE DESIGNED AND ANCHORED TO PROPERLY TRANSFER ALL LOADS TO THE STRUCTURE. BUCK DESIGN AND INSTALLATION IS THE RESPONSIBILITY OF THE ENGINEER OR ARCHITECT OF RECORD FOR THE PROJECT OF INSTALLATION.

4. THE INSTALLATION DETAILS DESCRIBED HEREIN ARE GENERIC AND MAY NOT REFLECT ACTUAL CONDITIONS FOR A SPECIFIC SITE. IF SITE CONDITIONS CAUSE INSTALLATION TO DEVIATE FROM THE REQUIREMENTS DETAILED HEREIN, A LICENSED ENGINEER OR ARCHITECT SHALL PREPARE SITE SPECIFIC DOCUMENTS FOR USE WITH THIS DOCUMENT.

5. APPROVED IMPACT PROTECTIVE SYSTEM **IS NOT REQUIRED** TO PROTECT THIS PRODUCT IN AREAS REQUIRING IMPACT RESISTANCE.

6. FRAME MATERIAL: STEEL (MIN. Fy = 33 ksi).

7. ALL STRUCTURAL MATERIALS & DISSIMILAR METALS SHALL BE PROTECTED, TREATED, PAINTED, COATED, AND/OR ISOLATED AS REQUIRED IN THE APPLICABLE SECTIONS OF THE CURRENT FLORIDA BUILDING CODE AND REFERENCED DESIGN SPECIFICATIONS.

8. GLASS MEET THE REQUIREMENTS OF ASTM E 1300 GLASS CHARTS. SEE SHEET 1 FOR GLAZING DETAILS.

TABLE OF CONTENTS

SHEET	SHEET DESCRIPTION
1	GENERAL NOTES AND GLAZING DETAIL
2	TYPICAL ELEVATIONS
3	DESIGN PRESSURE TABLES
4	ANCHOR LAYOUTS
5	VERTICAL SECTIONS
6	HORIZONTAL SECTIONS
7	INSTALLATION DETAILS AND NOTES

DESIGN PRESSURE RATING

FRAME SIZE	DESIGN PRESSURE	MISSILE RATING
SEE SHEET 3		LARGE AND SMALL MISSILE IMPACT

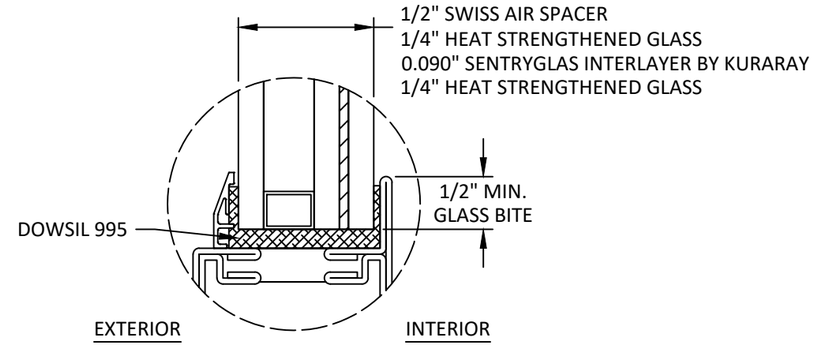

GLAZING DETAIL

GLAZING NOTES:
1. GLASS TYPE & THICKNESS COMPLIES WITH ASTM E1300 REQUIREMENTS AS WELL AS APPLICABLE SAFETY GLAZING REQUIREMENTS PER THE FBC. TEMPER AND SAFETY GLAZING REQUIREMENTS SHALL BE REVIEWED ON A SITE SPECIFIC BASIS.
2. SETTING BLOCK DUROMETER HARDNESS OF 70-90 (SHORE A) AS REFERENCED IN FBC CHAPTER 24.
3. SETTING BLOCKS TO BE LOCATED AT 1/4 SPAN LENGTH FOR GLASS WIDER THAN 36" AS PER FBC CHAPTER 24.
4. D.L.O. AND DESIGN PRESSURES MAY NOT EXCEED MAX VALUES IN SHEET 3.

EUROLINE STEEL WINDOWS & DOORS
22600 SAVI RANCH PKWY
YORBA LINDA, CA 92887
PH: (877) 590-2714

TITLE: SERIES 900 THERMAL STEEL FIXED WINDOW (HVHZ) (IMPACT) GENERAL NOTES & GLAZING DETAIL

PREPARED BY: BUILDING DROPS, INC.
1900 NE MIAMI COURT, SUITE 2-15
MIAMI, FL 33132
PH: (954) 399-8478
FAX: (954) 744-4738
WEB: www.buildingdrops.com

REMARKS	BY	DATE
A. 2026 FBC UPDATE	MS	7/21/2026

THE INSTALLATION DETAILS DESCRIBED HEREIN ARE GENERIC AND MAY NOT REFLECT ACTUAL CONDITIONS FOR A SPECIFIC SITE. IF SITE CONDITIONS CAUSE INSTALLATION TO DEVIATE FROM THE REQUIREMENTS DETAILED HEREIN, A LICENSED ENGINEER OR ARCHITECT SHALL PREPARE SITE SPECIFIC DOCUMENTS FOR USE WITH THIS DOCUMENT.

Digitally signed by Hermes F. Norero, P.E.
Reason: I am approving this document
Date: 2026.08.03 11:10:10 -04'00'

HERMES F. NORERO LICENSE No. 73778 STATE OF FLORIDA PROFESSIONAL ENGINEER

HERMES F. NORERO, P.E.
FLORIDA P.E. No 73778
BUILDING DROPS, INC
1900 NE MIAMI COURT, SUITE 2-15
MIAMI, FL 33132
FBPE CERT. OF AUTHORIZATION No. 29578

FL #: FL47336

DATE: 10.20.2025

DWG. BY: MS | CHK. BY: HFN

SCALE: NTS

DWG. #: ELS006

SHEET: 1 OF 7 | REV. A

7/27/2026 4:39 PM
c:\users\mengqisun\building drops, inc\building drops landing - common\projects\2026 code change projects\euroline steel windows & doors\cc-26-0522.2 - 2026 code change\dwgs\els006 - a.dwg

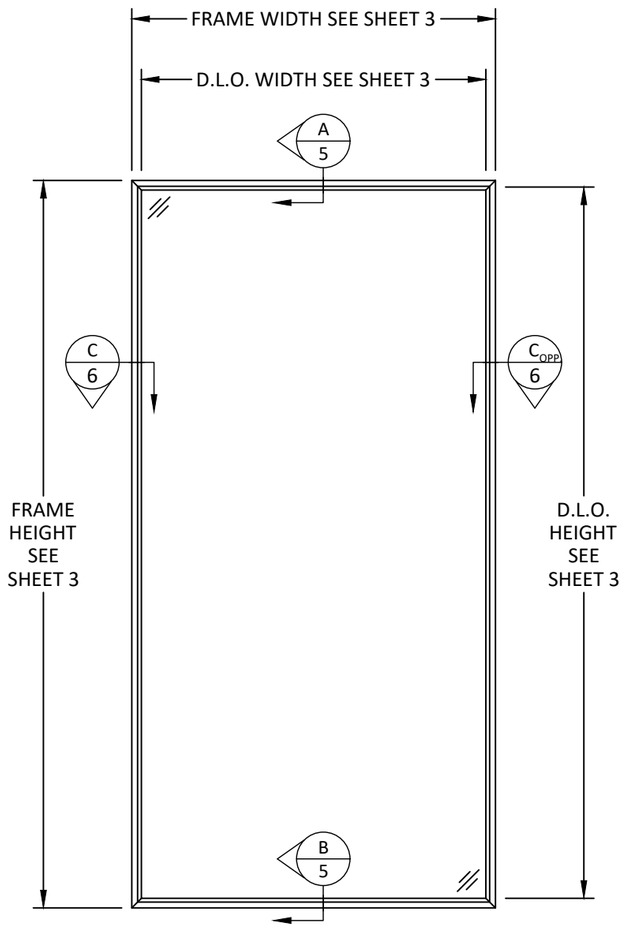

TYPICAL ELEVATION

SINGLE UNIT

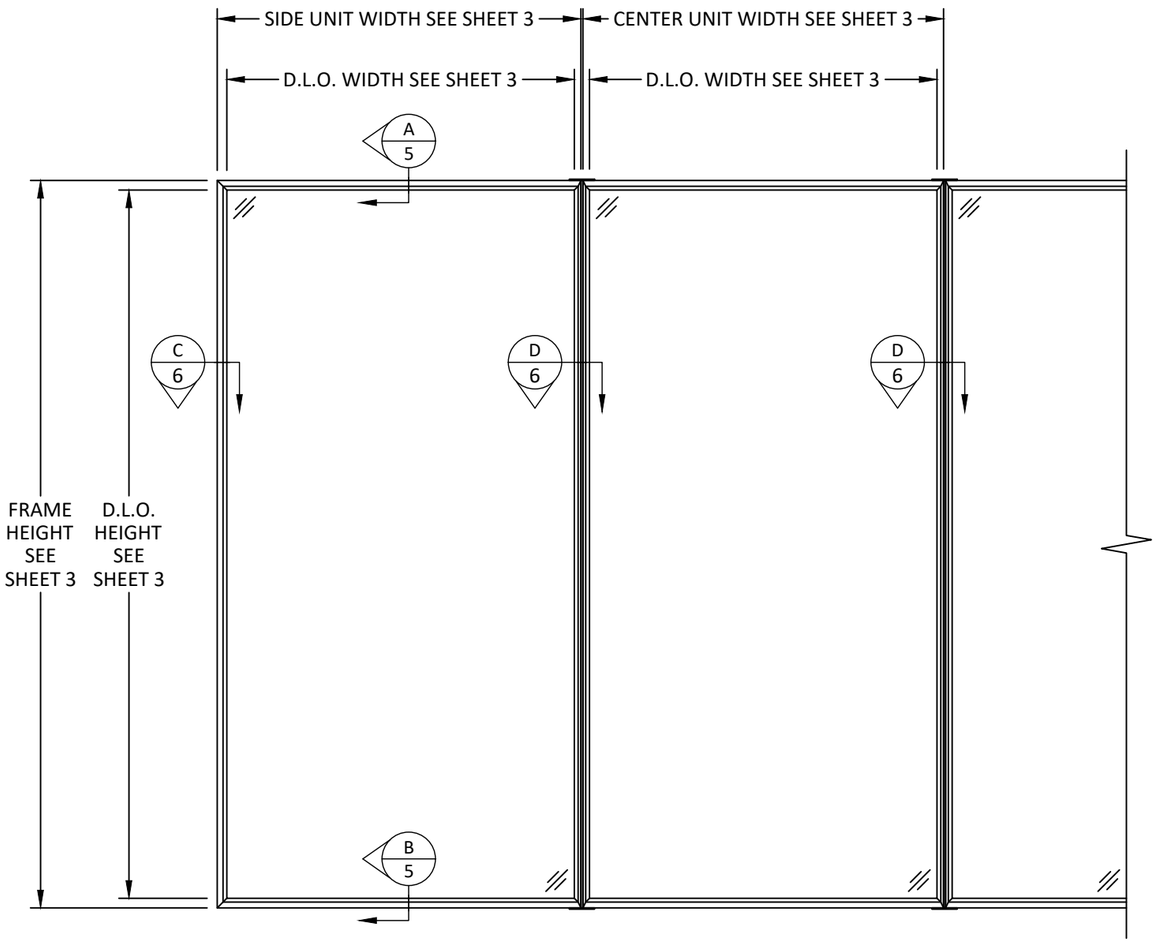

TYPICAL ELEVATION

MULLED UNIT

NOTES:
FRAME WIDTH (W) AND HEIGHT (H) ARE INTERCHANGEABLE FOR ALL SIZES SHOWN HEREIN NOT TO EXCEED MAXIMUM TESTED SQUARE FOOT AREA. ANCHOR SPACING SHALL NOT EXCEED THOSE SHOWN ABOVE FOR LONG OR SHORT LEG OF UNIT.

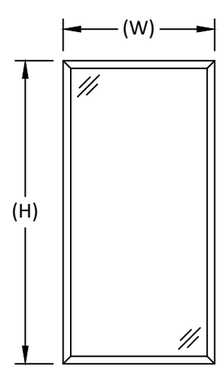

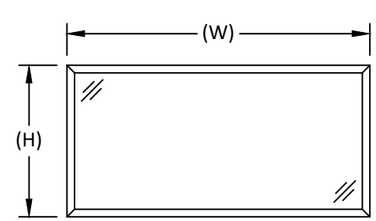

NOTES:
MULLIONS MAY BE USED HORIZONTALLY FOLLOWING THE SAME LIMITATION OF DESIGN PRESSURE AND LENGTH IN THE TABLE OF SHEET 3.

EUROLINE
STEEL WINDOWS & DOORS

22600 SAVI RANCH PKWY
YORBA LINDA, CA 92887
PH: (877) 590-2714

TITLE:
SERIES 900 THERMAL STEEL FIXED WINDOW (HVHZ) (IMPACT)
TYPICAL ELEVATIONS

PREPARED BY:
BUILDING DROPS, INC.
1900 NE MIAMI COURT, SUITE 2-15
MIAMI, FL 33132
PH: (954) 399-8478
FAX: (954) 744-4738
WEB: www.buildingdrops.com

REMARKS	BY	DATE
A. 2026 FBC UPDATE	MS	7/21/2026

THE INSTALLATION DETAILS DESCRIBED HEREIN ARE GENERIC AND MAY NOT REFLECT ACTUAL CONDITIONS FOR A SPECIFIC SITE. IF SITE CONDITIONS CAUSE INSTALLATION TO DEVIATE FROM THE REQUIREMENTS DETAILED HEREIN, A LICENSED ENGINEER OR ARCHITECT SHALL PREPARE SITE SPECIFIC DOCUMENTS FOR USE WITH THIS DOCUMENT.

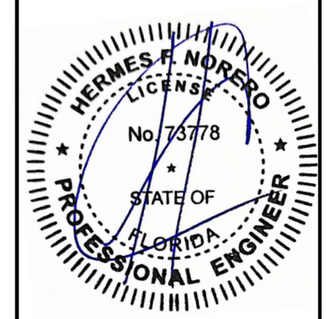

HERMES F. NORERO, P.E.
FLORIDA P.E. No 73778
BUILDING DROPS, INC
1900 NE MIAMI COURT, SUITE 2-15
MIAMI, FL 33132
FBPE CERT. OF AUTHORIZATION No. 29578

FL #: FL47336

DATE: 10.20.2025

DWG. BY: MS | CHK. BY: HFN

SCALE: NTS

DWG. #: ELS006

SHEET: 2 OF 7

REV. A

7/27/2026 4:39 PM
c:\users\inergcasun\building drops, inc\building drops landing - common\projects\2026 code change projects\euroline steel windows & doors\cc-26-0522.2 - 2026 code change\dwgs\els006 - a.dwg

DESIGN PRESSURE TABLE - SINGLE UNIT (+/- PSF)

FRAME HEIGHT (IN.)	FRAME WIDTH (IN.)																				
	48	54	60	66	72	78	84	90	96	102	108	114	120	126	132	138	144	156	168	192	216
48	65.00	65.00	65.00	65.00	65.00	65.00	65.00	65.00	65.00	65.00	65.00	65.00	65.00	65.00	65.00	65.00	65.00	65.00	65.00	65.00	65.00
54	65.00	65.00	65.00	65.00	65.00	65.00	65.00	65.00	65.00	65.00	65.00	65.00	65.00	65.00	65.00	65.00	65.00	65.00	65.00	65.00	-
60	65.00	65.00	65.00	65.00	65.00	65.00	65.00	65.00	65.00	65.00	65.00	65.00	65.00	65.00	65.00	65.00	65.00	65.00	65.00	-	-
66	65.00	65.00	65.00	65.00	65.00	65.00	65.00	65.00	65.00	65.00	65.00	65.00	65.00	65.00	65.00	65.00	65.00	65.00	-	-	-
72	65.00	65.00	65.00	65.00	65.00	65.00	65.00	65.00	65.00	65.00	65.00	65.00	65.00	65.00	65.00	65.00	65.00	-	-	-	-
78	65.00	65.00	65.00	65.00	65.00	59.75	59.75	59.75	59.75	59.75	59.75	59.75	59.75	59.75	59.75	-	-	-	-	-	-
84	65.00	65.00	65.00	65.00	65.00	59.75	55.29	55.29	55.29	55.29	55.29	55.29	55.29	-	-	-	-	-	-	-	-
90	65.00	65.00	65.00	65.00	65.00	59.75	55.29	51.44	51.44	51.44	51.44	51.44	-	-	-	-	-	-	-	-	-
96	65.00	65.00	65.00	65.00	65.00	59.75	55.29	51.44	48.10	48.10	-	-	-	-	-	-	-	-	-	-	-
102	65.00	65.00	65.00	65.00	65.00	59.75	55.29	51.44	48.10	-	-	-	-	-	-	-	-	-	-	-	-
108	65.00	65.00	65.00	65.00	65.00	59.75	55.29	51.44	-	-	-	-	-	-	-	-	-	-	-	-	-
114	65.00	65.00	65.00	65.00	65.00	59.75	55.29	51.44	-	-	-	-	-	-	-	-	-	-	-	-	-
120	65.00	65.00	65.00	65.00	65.00	59.75	55.29	-	-	-	-	-	-	-	-	-	-	-	-	-	-
126	65.00	65.00	65.00	65.00	65.00	59.75	-	-	-	-	-	-	-	-	-	-	-	-	-	-	-
132	65.00	65.00	65.00	65.00	65.00	59.75	-	-	-	-	-	-	-	-	-	-	-	-	-	-	-
138	65.00	65.00	65.00	65.00	65.00	-	-	-	-	-	-	-	-	-	-	-	-	-	-	-	-
144	65.00	65.00	65.00	65.00	65.00	-	-	-	-	-	-	-	-	-	-	-	-	-	-	-	-
156	65.00	65.00	65.00	65.00	-	-	-	-	-	-	-	-	-	-	-	-	-	-	-	-	-
168	65.00	65.00	65.00	-	-	-	-	-	-	-	-	-	-	-	-	-	-	-	-	-	-
192	65.00	65.00	-	-	-	-	-	-	-	-	-	-	-	-	-	-	-	-	-	-	-
216	65.00	-	-	-	-	-	-	-	-	-	-	-	-	-	-	-	-	-	-	-	-

NOTE: FIXED WINDOW WITH DIMENSIONS LESS THAN THE TABLE SHOWN ABOVE IS QUALIFIED TO THE DESIGN PRESSURE OF +/- 65 PSF.

SINGLE UNIT:
D.L.O. HEIGHT = FRAME HEIGHT - 3 11/16"
D.L.O. WIDTH = FRAME WIDTH - 3 11/16"

MULLED UNIT:
D.L.O. HEIGHT = FRAME HEIGHT - 3 11/16"
D.L.O. WIDTH = SIDE UNIT WIDTH - 3 1/8", OR
D.L.O. WIDTH = CENTER UNIT WIDTH - 2 9/16"

$$\text{TRIBUTARY WIDTH} = \frac{\text{FRAME WIDTH 1} + \text{FRAME WIDTH 2}}{2}$$

DESIGN PRESSURE TABLE - MULLED UNIT (+/- PSF)

FRAME HEIGHT (IN.)	TRIBUTARY WIDTH (IN.)																				
	48	54	60	66	72	78	84	90	96	102	108	114	120	126	132	138	144	156	168	192	216
48	65.00	65.00	65.00	65.00	65.00	65.00	65.00	65.00	65.00	65.00	65.00	65.00	65.00	65.00	65.00	65.00	65.00	65.00	65.00	65.00	65.00
54	65.00	65.00	65.00	65.00	65.00	65.00	65.00	65.00	65.00	65.00	65.00	65.00	65.00	65.00	65.00	65.00	65.00	65.00	65.00	65.00	-
60	65.00	65.00	65.00	65.00	65.00	65.00	65.00	65.00	65.00	65.00	65.00	65.00	65.00	65.00	65.00	65.00	65.00	65.00	65.00	-	-
66	65.00	65.00	65.00	65.00	65.00	65.00	65.00	65.00	65.00	65.00	65.00	65.00	65.00	65.00	65.00	65.00	65.00	65.00	-	-	-
72	65.00	65.00	65.00	65.00	65.00	65.00	65.00	65.00	65.00	65.00	65.00	65.00	65.00	65.00	65.00	65.00	65.00	-	-	-	-
78	65.00	65.00	65.00	65.00	65.00	59.75	59.75	59.75	59.75	59.75	59.75	59.75	59.75	59.75	59.75	-	-	-	-	-	-
84	65.00	65.00	65.00	65.00	65.00	59.75	55.29	55.29	55.29	55.29	55.29	55.29	55.29	-	-	-	-	-	-	-	-
90	65.00	65.00	65.00	65.00	65.00	59.75	55.29	51.44	51.44	51.44	51.44	51.44	-	-	-	-	-	-	-	-	-
96	65.00	65.00	65.00	65.00	65.00	59.75	55.29	51.44	48.10	48.10	-	-	-	-	-	-	-	-	-	-	-
102	65.00	65.00	65.00	65.00	65.00	59.75	55.29	51.44	48.10	-	-	-	-	-	-	-	-	-	-	-	-
108	65.00	65.00	65.00	65.00	65.00	59.75	55.29	51.44	-	-	-	-	-	-	-	-	-	-	-	-	-
114	65.00	65.00	65.00	65.00	65.00	59.75	55.29	51.44	-	-	-	-	-	-	-	-	-	-	-	-	-
120	65.00	65.00	65.00	65.00	65.00	59.75	55.29	-	-	-	-	-	-	-	-	-	-	-	-	-	-
126	65.00	65.00	65.00	65.00	65.00	59.75	-	-	-	-	-	-	-	-	-	-	-	-	-	-	-
132	65.00	65.00	65.00	65.00	65.00	59.75	-	-	-	-	-	-	-	-	-	-	-	-	-	-	-
138	65.00	65.00	65.00	65.00	65.00	-	-	-	-	-	-	-	-	-	-	-	-	-	-	-	-
144	65.00	65.00	65.00	65.00	65.00	-	-	-	-	-	-	-	-	-	-	-	-	-	-	-	-

EUROLINE
STEEL WINDOWS & DOORS

22600 SAVI RANCH PKWY
YORBA LINDA, CA 92887
PH: (877) 590-2714

TITLE: SERIES 900 THERMAL STEEL FIXED WINDOW (HVHZ) (IMPACT)
DESIGN PRESSURE TABLES

PREPARED BY:
BUILDING DROPS, INC.
1900 NE MIAMI COURT, SUITE 2-15
MIAMI, FL 33132
PH: (954) 399-8478
FAX: (954) 744-4738
WEB: www.buildingdrops.com

REMARKS	BY	DATE
A. 2026 FBC UPDATE	MS	7/21/2026

THE INSTALLATION DETAILS DESCRIBED HEREIN ARE GENERIC AND MAY NOT REFLECT ACTUAL CONDITIONS FOR A SPECIFIC SITE. IF SITE CONDITIONS CAUSE INSTALLATION TO DEVIATE FROM THE REQUIREMENTS DETAILED HEREIN, A LICENSED ENGINEER OR ARCHITECT SHALL PREPARE SITE SPECIFIC DOCUMENTS FOR USE WITH THIS DOCUMENT.

HERMES F. NORERO LICENSE No. 73778 STATE OF FLORIDA PROFESSIONAL ENGINEER

HERMES F. NORERO, P.E.
FLORIDA P.E. No 73778
BUILDING DROPS, INC
1900 NE MIAMI COURT, SUITE 2-15
MIAMI, FL 33132
FBPE CERT. OF AUTHORIZATION No. 29578

FL #: FL47336
DATE: 10.20.2025
DWG. BY: MS
CHK. BY: HFN
SCALE: NTS
DWG. #: ELS006
SHEET: 3
REV. A
OF 7

7/27/2026 4:39 PM
c:\users\mengdsun\building drops, inc\building drops landing - common\projects\2026 code change projects\euroline steel windows & doors\cc-26-0522.2 - 2026 code change\dwgs\els006 - a.dwg

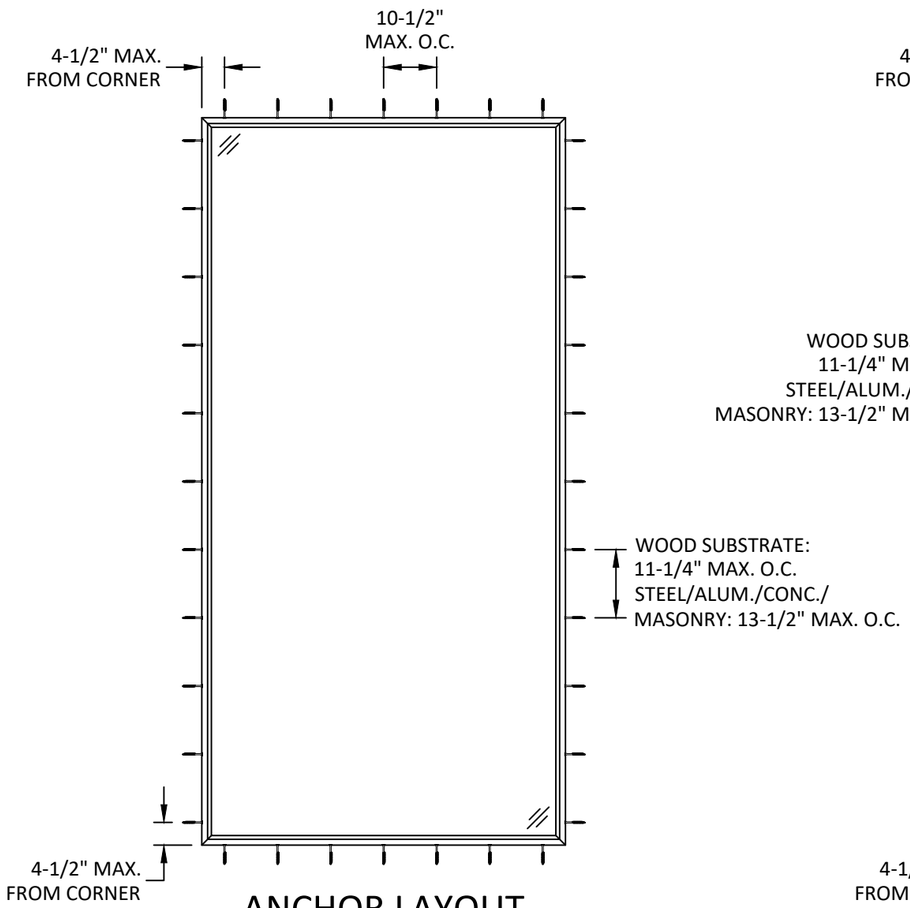

ANCHOR LAYOUT
SINGLE UNIT

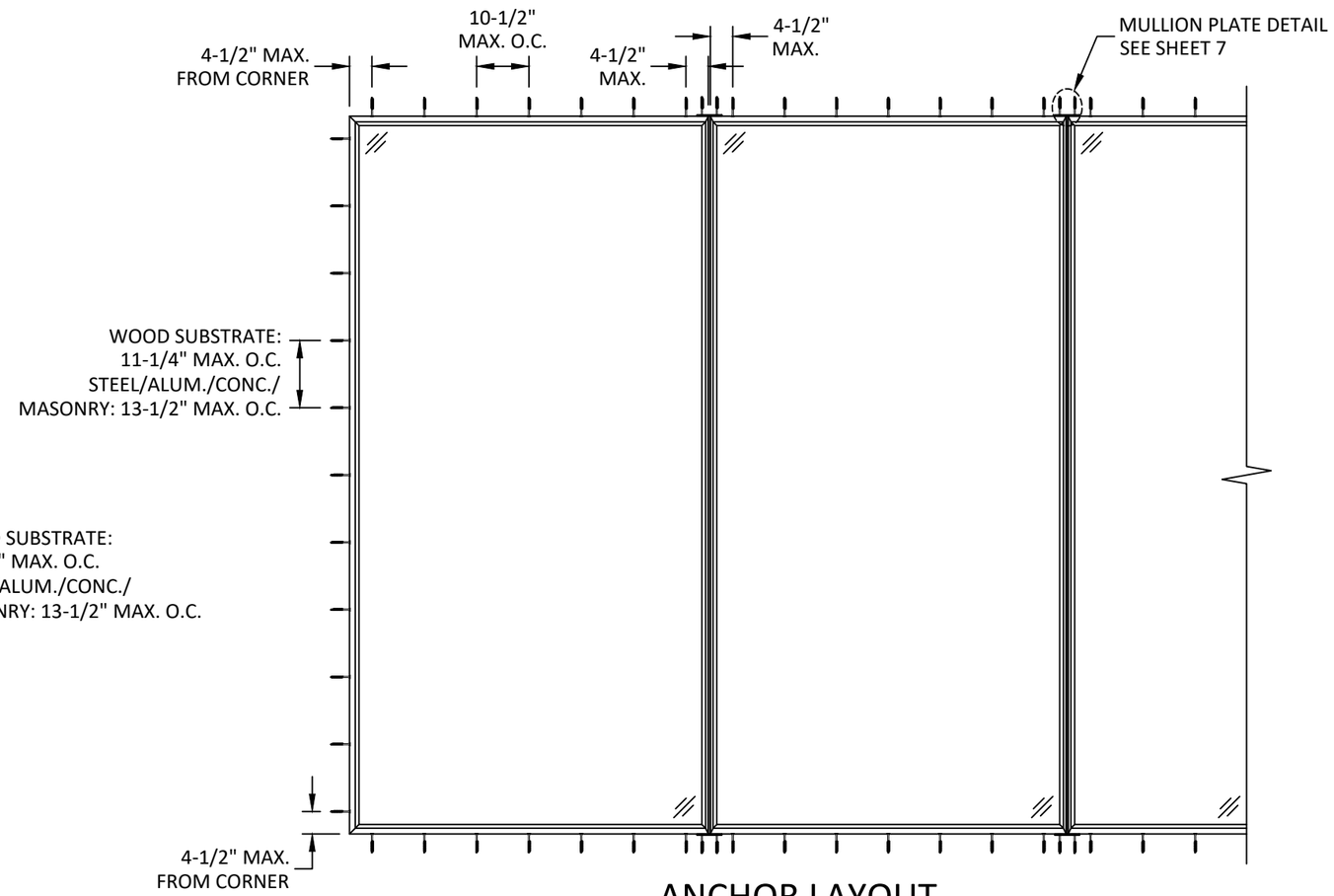

ANCHOR LAYOUT
MULLED UNIT

EUROLINE
STEEL WINDOWS & DOORS

22600 SAVI RANCH PKWY
YORBA LINDA, CA 92887
PH: (877) 590-2714

TITLE:
SERIES 900 THERMAL STEEL FIXED WINDOW (HVHZ) (IMPACT)
ANCHOR LAYOUTS

PREPARED BY:
BUILDING DROPS, INC.
1900 NE MIAMI COURT, SUITE 2-15
MIAMI, FL 33132
PH: (954) 399-8478
FAX: (954) 744-4738
WEB: www.buildingdrops.com

REMARKS	BY	DATE
A. 2026 FBC UPDATE	MS	7/21/2026

THE INSTALLATION DETAILS DESCRIBED HEREIN ARE GENERIC AND MAY NOT REFLECT ACTUAL CONDITIONS FOR A SPECIFIC SITE. IF SITE CONDITIONS CAUSE INSTALLATION TO DEVIATE FROM THE REQUIREMENTS DETAILED HEREIN, A LICENSED ENGINEER OR ARCHITECT SHALL PREPARE SITE SPECIFIC DOCUMENTS FOR USE WITH THIS DOCUMENT.

HERMES F. NORERO
LICENSE
No. 73778
STATE OF
FLORIDA
PROFESSIONAL ENGINEER

HERMES F. NORERO, P.E.
FLORIDA P.E. No 73778
BUILDING DROPS, INC
1900 NE MIAMI COURT, SUITE 2-15
MIAMI, FL 33132
FBPE CERT. OF AUTHORIZATION No. 29578

FL #: FL47336

DATE: 10.20.2025

DWG. BY: MS
CHK. BY: HFN

SCALE: NTS

DWG. #: ELS006

SHEET: 4
REV. A

7/27/2026 4:39 PM
c:\users\mengdsun\building drops, inc\building drops landing - common\projects\2026 code change projects\euroline steel windows & doors\cc-26-0522.2 - 2026 code change\dwgs\elc006 - a.dwg

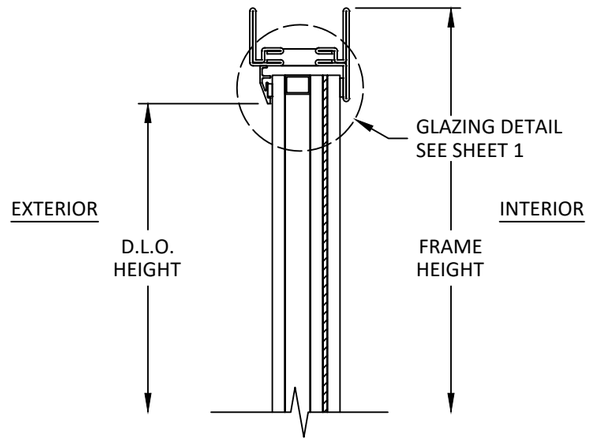

A/5 VERTICAL SECTION

HEAD

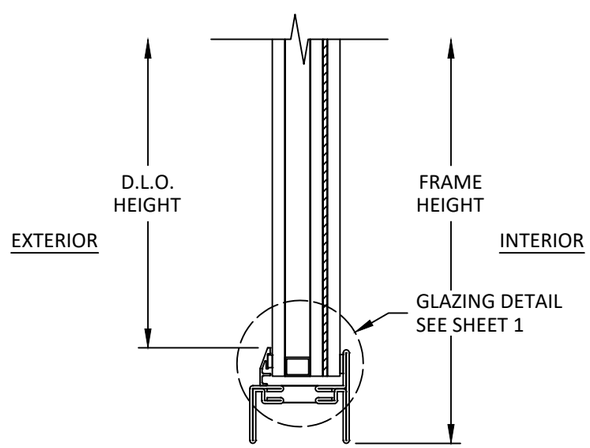

B/5 VERTICAL SECTION

SILL

EUROLINE
STEEL WINDOWS & DOORS

22600 SAVI RANCH PKWY
YORBA LINDA, CA 92887
PH: (877) 590-2714

TITLE: SERIES 900 THERMAL STEEL FIXED WINDOW (HVHZ) (IMPACT)

VERTICAL SECTIONS

PREPARED BY:
BUILDING DROPS, INC.
1900 NE MIAMI COURT, SUITE 2-15
MIAMI, FL 33132
PH: (954) 399-8478
FAX: (954) 744-4738
WEB: www.buildingdrops.com

REMARKS	BY	DATE
A. 2026 FBC UPDATE	MS	7/21/2026

THE INSTALLATION DETAILS DESCRIBED HEREIN ARE GENERIC AND MAY NOT REFLECT ACTUAL CONDITIONS FOR A SPECIFIC SITE. IF SITE CONDITIONS CAUSE INSTALLATION TO DEVIATE FROM THE REQUIREMENTS DETAILED HEREIN, A LICENSED ENGINEER OR ARCHITECT SHALL PREPARE SITE SPECIFIC DOCUMENTS FOR USE WITH THIS DOCUMENT.

HERMES F. NORERO
LICENSE
No. 73778
STATE OF
FLORIDA
PROFESSIONAL ENGINEER

HERMES F. NORERO, P.E.
FLORIDA P.E. No 73778
BUILDING DROPS, INC
1900 NE MIAMI COURT, SUITE 2-15
MIAMI, FL 33132
FBPE CERT. OF AUTHORIZATION No. 29578

FL #: FL47336

DATE: 10.20.2025

DWG. BY: MS

CHK. BY: HFN

SCALE: NTS

DWG. #: ELS006

SHEET: 5 OF 7

REV. A

7/27/2026 4:39 PM
c:\users\mengqisun\building drops, inc\building drops landing - common\projects\2026 code change projects\euroline steel windows & doors\cc-26-0522.2 - 2026 code change\dwgs\els006 - a.dwg

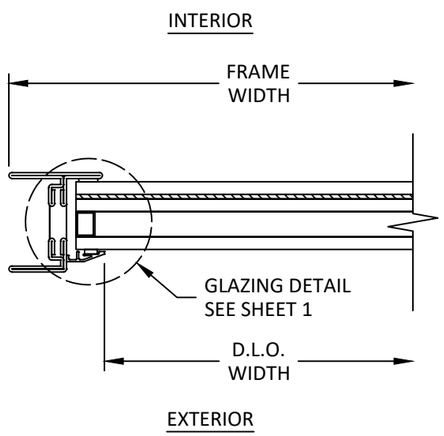

C/6 HORIZONTAL SECTION
JAMB

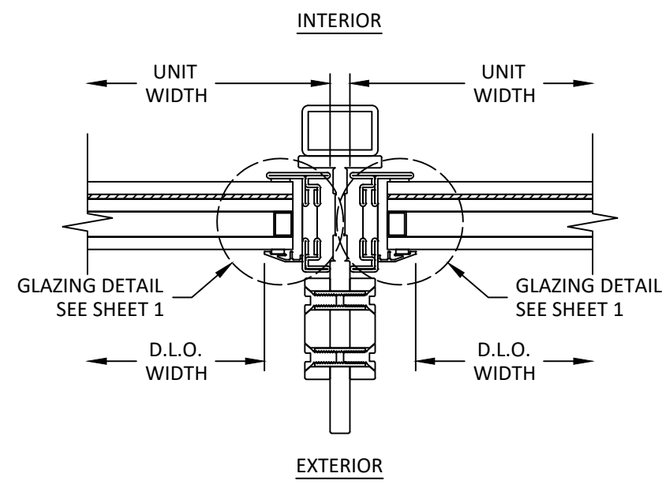

D/6 HORIZONTAL SECTION
MULLION

EUROLINE
STEEL WINDOWS & DOORS

22600 SAVI RANCH PKWY
YORBA LINDA, CA 92887
PH: (877) 590-2714

TITLE: SERIES 900 THERMAL STEEL FIXED WINDOW (HVHZ) (IMPACT)
HORIZONTAL SECTIONS

PREPARED BY:
BUILDING DROPS, INC.
1900 NE MIAMI COURT, SUITE 2-15
MIAMI, FL 33132
PH: (954) 399-8478
FAX: (954) 744-4738
WEB: www.buildingdrops.com
BUILDING DROPS

REMARKS	BY	DATE
A. 2026 FBC UPDATE	MS	7/21/2026

THE INSTALLATION DETAILS DESCRIBED HEREIN ARE GENERIC AND MAY NOT REFLECT ACTUAL CONDITIONS FOR A SPECIFIC SITE. IF SITE CONDITIONS CAUSE INSTALLATION TO DEVIATE FROM THE REQUIREMENTS DETAILED HEREIN, A LICENSED ENGINEER OR ARCHITECT SHALL PREPARE SITE SPECIFIC DOCUMENTS FOR USE WITH THIS DOCUMENT.

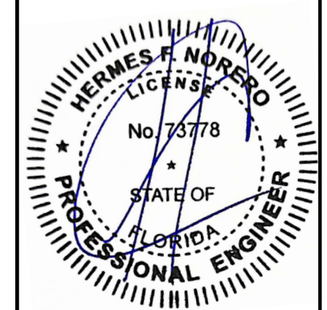

HERMES F. NORERO, P.E.
FLORIDA P.E. No 73778
BUILDING DROPS, INC
1900 NE MIAMI COURT, SUITE 2-15
MIAMI, FL 33132
FBPE CERT. OF AUTHORIZATION No. 29578

FL #: FL47336

DATE: 10.20.2025

DWG. BY: MS | CHK. BY: HFN

SCALE: NTS

DWG. #: ELS006

SHEET: 6 | REV. A

OF 7

7/27/2026 4:39 PM
c:\users\mengqisun\building drops, inc\building drops landing - common\projects\2026 code change projects\euroline steel windows & doors\cc-26-05222 - 2026 code change\dwgs\els006 - a.dwg

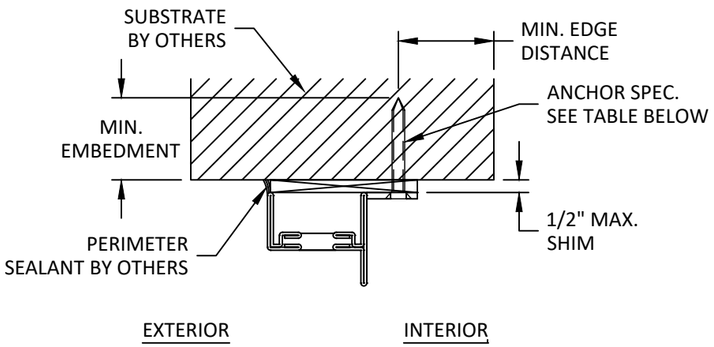

E/7 INSTALLATION DETAILS

HEAD SHOWN
JAMB SIMILAR

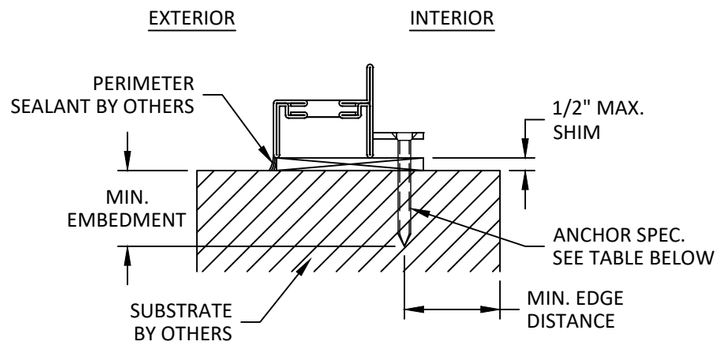

F/7 INSTALLATION DETAILS

SILL SHOWN

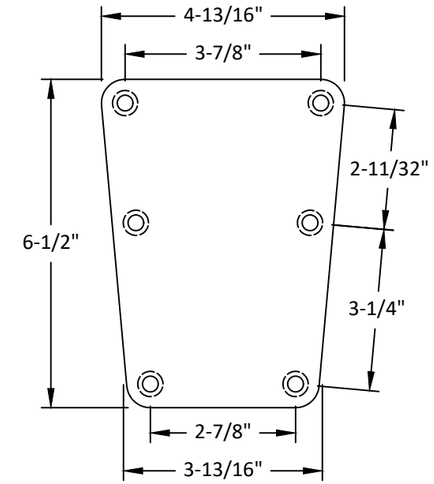

MULLION PLATE DETAIL

INSTALLATION NOTES:

1. ONE (1) INSTALLATION ANCHOR IS REQUIRED AT EACH ANCHOR LOCATION.
2. THE NUMBER OF INSTALLATION ANCHORS DEPICTED IS THE MINIMUM NUMBER OF ANCHORS TO BE USED FOR PRODUCT INSTALLATION OF THE MAXIMUM SIZE LISTED.
3. INSTALL INDIVIDUAL INSTALLATION ANCHORS WITHIN A TOLERANCE OF ±1/4 INCH THE DEPICTED LOCATION & SPACING IN THE ANCHOR LAYOUT DETAILS (I.E., WITHOUT CONSIDERATION OF TOLERANCES). TOLERANCES ARE NOT CUMULATIVE FROM ONE INSTALLATION ANCHOR TO THE NEXT.
4. SHIM AS REQUIRED AT EACH INSTALLATION ANCHOR WITH LOAD BEARING SHIM(S). MAXIMUM ALLOWABLE SHIM STACK TO BE 1/2 INCH. SHIM WHERE SPACE OF 1/16 INCH OR GREATER OCCURS. SHIM(S) SHALL BE CONSTRUCTED OF HIGH DENSITY PLASTIC OR BETTER.
5. FOR MASONRY OR CONCRETE OPENINGS, A 1X WOOD BUCK MAY BE USED (OPTIONAL) AS LONG AS THE MINIMUM EMBEDMENT AND EDGE DISTANCE REQUIREMENTS ARE STILL MET WITHIN THE CORRESPONDING HOST SUBSTRATE. SEE GENERAL NOTE #3 ON SHEET 1 FOR MORE INFORMATION.
6. MINIMUM EMBEDMENT AND EDGE DISTANCE EXCLUDE WALL FINISHES, INCLUDING BUT NOT LIMITED TO STUCCO, FOAM, BRICK VENEER, AND SIDING.
7. INSTALLATION ANCHORS AND ASSOCIATED HARDWARE MUST BE MADE OF CORROSION RESISTANT MATERIAL OR HAVE A CORROSION RESISTANT COATING.
   - 7.1. FASTENERS USED WITHIN 3,000 FEET OF A SALTWATER COASTLINE AND INSTALLED IN ENCLOSED SPACES SHALL BE GALVANIZED IN ACCORDANCE WITH SECTION 1711.1.1 (E.G., ASTM A153 CLASS D, ASTM A641 CLASS 3S, OR EQUIVALENT CORROSION RESISTANCE).
   - 7.2. CONNECTORS AND METAL PLATES USED WITHIN 3,000 FEET OF A SALTWATER COASTLINE SHALL BE STANDARD GALVANIZED IN ACCORDANCE WITH SECTION 1711.1.2 (E.G., ASTM A653 G90, ASTM A123, OR PROTECTIVE COATING PER TPI 1).
8. FOR HOLLOW BLOCK AND GROUT FILLED BLOCK, DO NOT INSTALL INSTALLATION ANCHORS INTO MORTAR JOINTS. EDGE DISTANCE IS MEASURED FROM FREE EDGE OF BLOCK OR EDGE OF MORTAR JOINT INTO FACE SHELL OF BLOCK.
9. INSTALLATION ANCHORS SHALL BE INSTALLED IN ACCORDANCE WITH ANCHOR MANUFACTURER'S INSTALLATION INSTRUCTIONS AND ANCHORS SHALL NOT BE USED IN SUBSTRATES WITH STRENGTHS LESS THAN THE MINIMUM STRENGTH SPECIFIED BY THE ANCHOR MANUFACTURER.

ANCHOR SCHEDULE

LOCATION	SUBSTRATE	ANCHOR TYPE	MIN. EMBEDMENT	MIN. EDGE DISTANCE
THROUGH TAB	WOOD: MIN. S.G. = 0.55	#14 WOOD SCREW	1-1/2"	3/4"
	STEEL: MIN. 18 GA. MIN. Fy = 33 ksi	1/4" GRADE 5 SELF-DRILLING/ SELF-TAPPING SCREW	3 THREADS MIN PENETRATION BEYOND METAL	1/2"
	ALUMINUM: MIN. 1/8" THICK MIN. 6063-T5			
	CONCRETE: MIN. f'c = 3000 psi	1/4" ITW TAPCON	1-1/2"	1-5/8"
	MASONRY: HOLLOW OR GROUT-FILLED BLOCK per ASTM C90, MIN. 2000 PSI		1"	3-3/8"
THROUGH MULLION PLATE	WOOD: MIN. S.G. = 0.55	#14 WOOD SCREW	1-1/2"	3/4"
	STEEL: MIN. 18 GA. MIN. Fy = 33 ksi	1/4" GRADE 5 SELF-DRILLING/ SELF-TAPPING SCREW	3 THREADS MIN PENETRATION BEYOND METAL	1/2"
	ALUMINUM: MIN. 1/8" THICK MIN. 6063-T5			
	CONCRETE: MIN. f'c = 3000 psi	1/4" ITW TAPCON	1-3/4"	2-3/8"

EUROLINE STEEL WINDOWS & DOORS
22600 SAVI RANCH PKWY
YORBA LINDA, CA 92887
PH: (877) 590-2714

TITLE: SERIES 900 THERMAL STEEL FIXED WINDOW (HVHZ) (IMPACT) INSTALLATION DETAILS & NOTES

PREPARED BY: BUILDING DROPS, INC.
1900 NE MIAMI COURT, SUITE 2-15
MIAMI, FL 33132
PH: (954) 399-8478
FAX: (954) 744-4738
WEB: www.buildingdrops.com

REMARKS	BY	DATE
A. 2026 FBC UPDATE	MS	7/21/2026

THE INSTALLATION DETAILS DESCRIBED HEREIN ARE GENERIC AND MAY NOT REFLECT ACTUAL CONDITIONS FOR A SPECIFIC SITE. IF SITE CONDITIONS CAUSE INSTALLATION TO DEVIATE FROM THE REQUIREMENTS DETAILED HEREIN, A LICENSED ENGINEER OR ARCHITECT SHALL PREPARE SITE SPECIFIC DOCUMENTS FOR USE WITH THIS DOCUMENT.

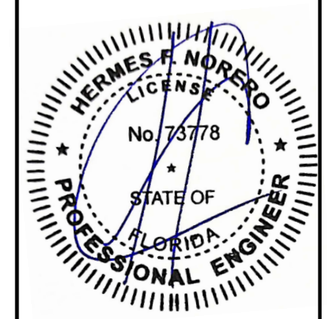

HERMES F. NORERO, P.E.
FLORIDA P.E. No 73778
BUILDING DROPS, INC
1900 NE MIAMI COURT, SUITE 2-15
MIAMI, FL 33132
FBPE CERT. OF AUTHORIZATION No. 29578

FL #: FL47336
DATE: 10.20.2025
DWG. BY: MS
CHK. BY: HFN
SCALE: NTS
DWG. #: ELS006
SHEET: 7 OF 7
REV. A

7/27/2026 4:39 PM
c:\users\mengqisun\building drops, inc\building drops landing - common\projects\2026 code change projects\euroline steel windows & doors\cc-26-0522.2 - 2026 code change\dwgs\els006 - a.dwg